Wiring Diagrams

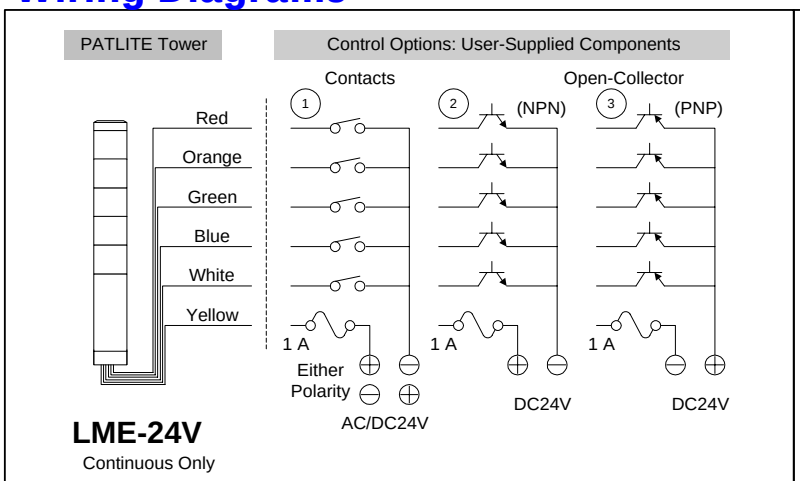

LME-24V

Continuous Only

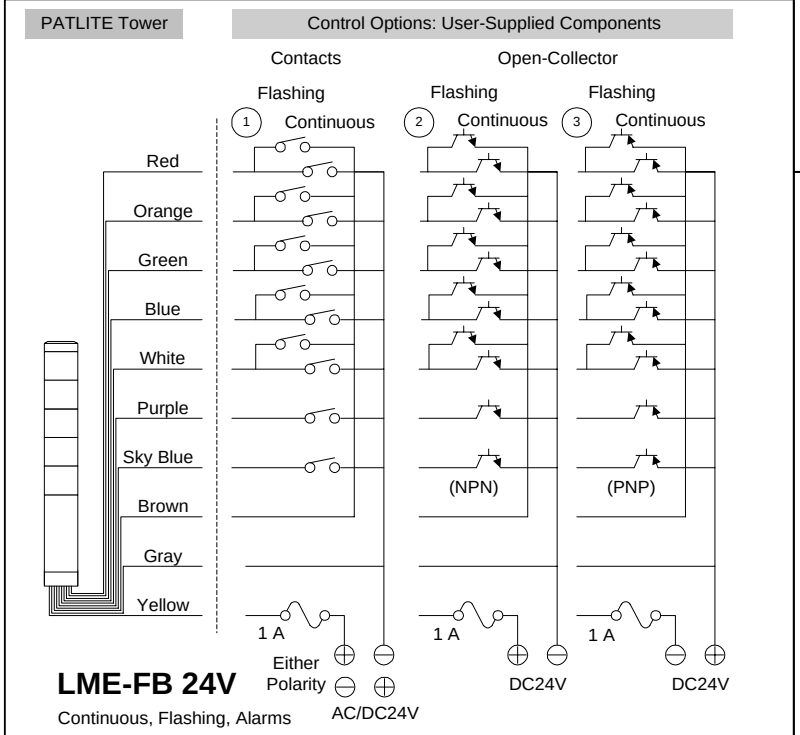

LME-FB 24V

Continuous, Flashing, Alarms

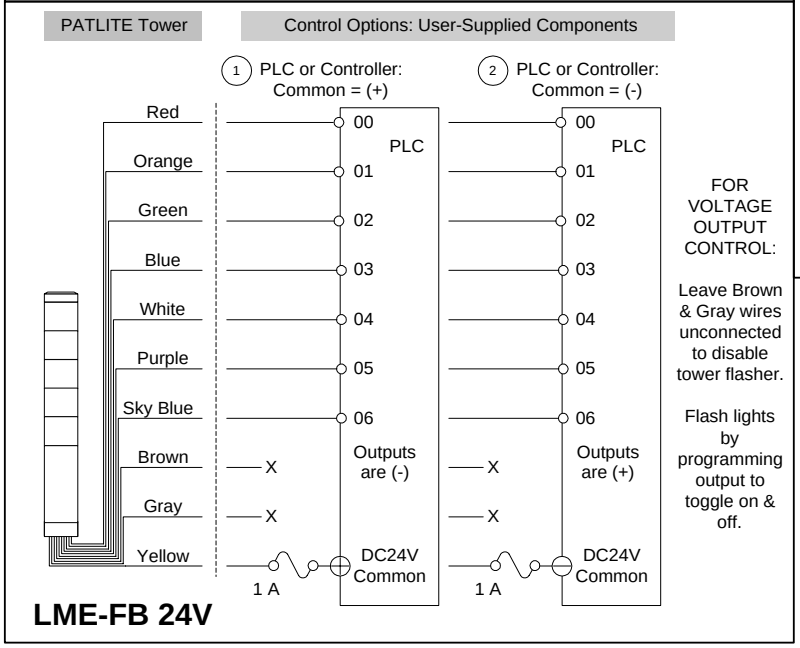

LME-FB 24V

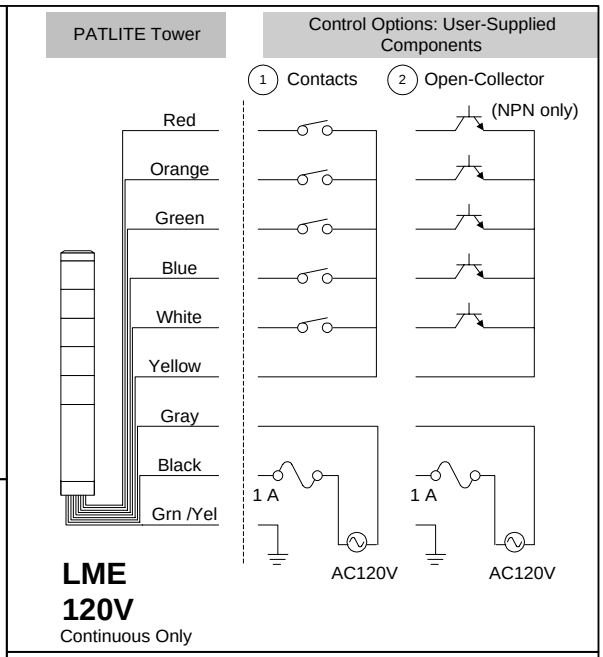

LME 120V

Continuous Only

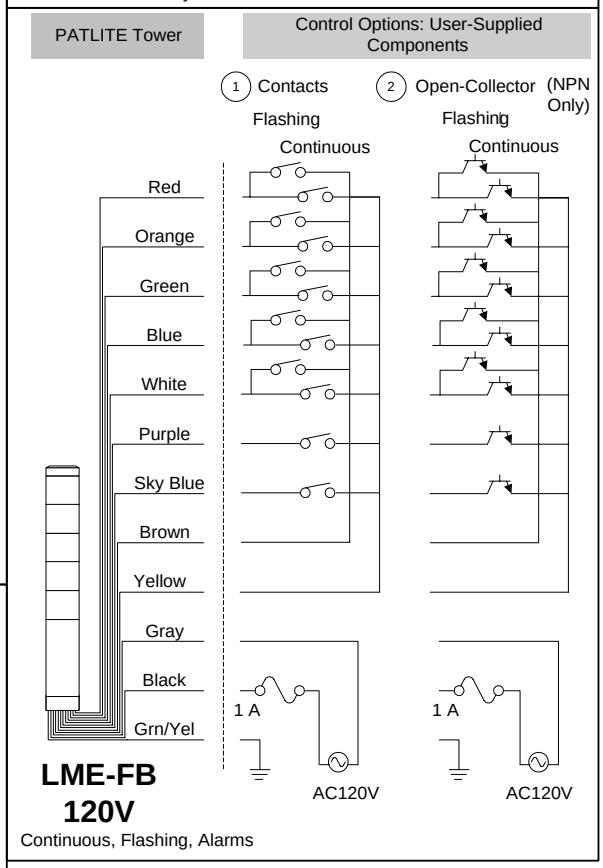

LME-FB 120V

Continuous, Flashing, Alarms

Wire Correspondence Information			
Wire Color	Function	Wire Color	Function
Red	Red Module	White	Clear Module
Orange	Amber Module	Purple[2]	Fast Beep Alarm
Green	Green Module	Sky Blue[2]	Slow Beep Alarm
Dark Blue	Blue Module	Brown[2]	Flashing Common
Grn / Yel[1]	Ground		

[1] AC120V only

[2] "FB" Style only